YANMAR

PARTS CATALOG

0CR10-M67700EN

Last update Mar., 2011

PREFACE

1.This Parts Catalog carries all parts incorporated in YANMAR Model 2TNV70-KAP engine manufactured since October, 2006.

2.Each illustration corresponds to the parts list on the following page.

3.When ordering parts,clearly write down the engine model and serial number,as well as the name and number of each part in your order sheet. This will help insure reliable delivery of the parts you have ordered.

How to read this Parts Catalog.

1.Parts mentioned in Parts Catalog may not necessarily be standard equipping parts
2.Parts change may be made without prior notice.
3.Form of this Parts Catalog.

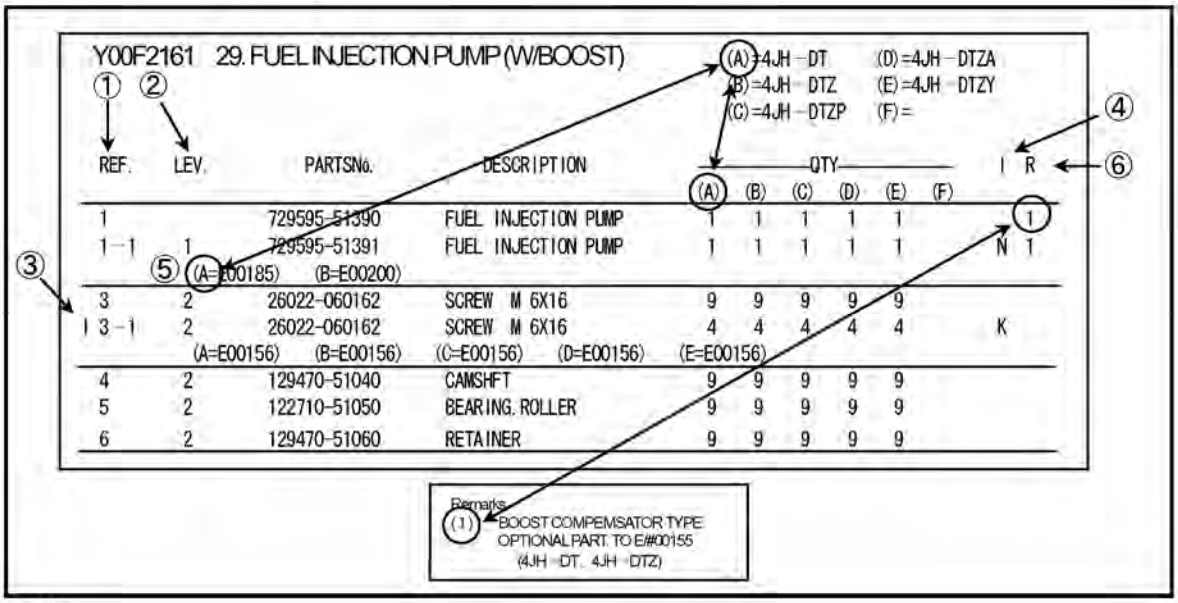

①Ref. No,

The Ref. No, in the list may not be in accordance with the Ref. No, on illustration.

(Ex.) illustration No, List heed No,

1 1 (Before change) → 1-1 (After change)

When interchangeable symbol N, and k, illustrations for the new parts are sometimes omitted.

②Lev. (Level)

Indication and Meaning of Level

Level Hereunder is given the relation among the number of number (1,2,3) the level and the nominal parent-child relationship.

1 ----- Parent parts (Assembly parts)
2 ----- Child parts included in " 1 " (Semi-Assembly parts, component parts of Assembly parts.)
3 ----- Child parts included in " 2 ", Grand-child parts in terms of " 1 ".
(Component parts of Semi-Assembly parts.)

Note) A parts of non-sale parts are illustrated but not listed.

③Change Mark

Change Mark " I " is given to the part for which a design change was made at this time.
The design change was not shown in the last published Parts Catalog.

④Interchangeability Mark

In the case where a part change took place, one of the following interchangeability marks is indicated for that part

Symbol	Interchangeability	Contents note
N	Old ⇐ ✕ ⇒ New	New Part is interchangeable for Old Part but not interchangeable conversely.
Q	Old ⇐ ✕ ⇒ New	New Part is not interchangeable for Old Part but interchangeable conversely.
R	Old ⇐ ✕ ⇒ New	New Part is interchangeable for Old Part and vice versa.
S	Old ⇐ ✕ ⇒ New	New Part is not interchangeable for Old Part and vice versa.
W		Part newly added.
Z		Part discontinued.
F		Not interchangeable single part but interchangeable by set of the related parts.
K		Changed only in quantity used.

⑤Effective Machine No,

When a part is changed, Effective Machine No, of a Model for which the part is applicable is indication
In each column of (A)-(F).

Product Symbol	Product No,	Product Symbol	Product No,
C	Clutch No, Compressor No,	M	Machine No,
D	Drive No,	T	Tractor No,
E	Engine No,	Note 1)※	Date

Note 1) Date may follow the symbol in some cases.(Ex.) ※1996.01
Note 2) As far as engine models shown by " XXX " are concerned, the modification of the parts could not be Predicted or the engine models themselves could not be identified.
Note 3) (A=E/#00185) means that the design change on the part has been effective for the model at the, column (A) (in the case, for 4JH-DT) on and from E/#(Engine Serial Number) 00185

⑥Remarks Mark

Figures or alphabets (Symbols) are entered in the remark column.
The comments (remarks) on the pertinent parts are indicated in the lower part of the list by the same symbols a those stated above.

Contents

0CR10-M67700

Fig. No.	Fig. Name
ENGINE SECTION	
1.	CYLINDER BLOCK
2.	GEAR HOUSING
3.	MOUNTING FLANGE & OIL SUMP
4.	CYLINDER HEAD & BONNET
5.	EXHAUST MANIFOLD
6.	CAMSHAFT & DRIVING GEAR
7.	CRANKSHAFT & PISTON
8.	LUB.OIL SYSTEM
9.	COOLING WATER SYSTEM
10.	FUEL INJECTION PUMP
11.	GOVERNOR
12.	FUEL INJECTION VALVE
13.	FUEL LINE
14.	STARTING MOTOR
15.	TENSTION PULLEY
16.	GASKET SET

Fig.1. CYLINDER BLOCK

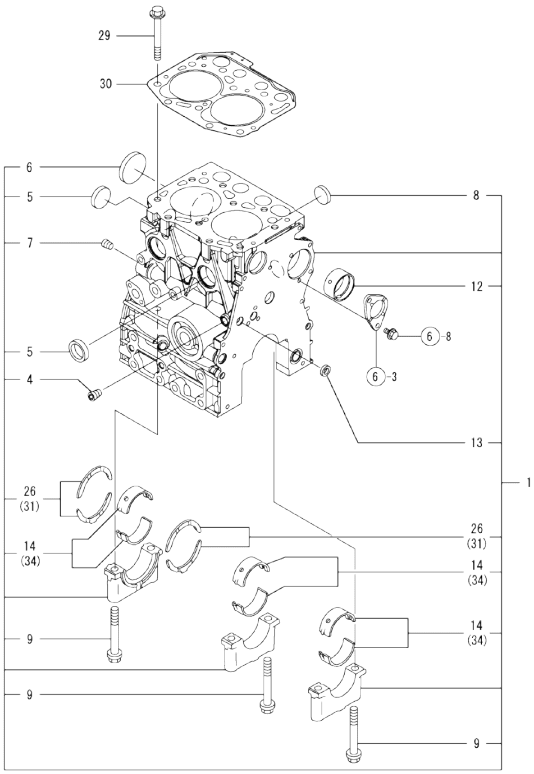

Remarks
(1) REPAIR PART.
(2) OVER-SIZE(O.S=0.25)PART.
(3) UNDER-SIZE(U.S=0.25)PART.

(A)=2TNV70-KAP
(B)=
(C)=
(D)=
(E)=
(F)=

No.	Lev.	Parts No.	Description	Q'ty (A)	(B)	(C)	(D)	(E)	(F)	I	R
1	1	719415-01560	BLOCK ASSY, CYLINDER	1							
4	2	124060-01050	PLUG, PT1/8	1							
5	2	105311-01090	PLUG, 30	3							
6	2	119623-01250	PLUG, 45	1							
7	2	124160-01910	PLUG, PT1/4	1							
8	2	119285-01990	PLUG, 25	2							
9	2	119620-02020	BOLT, METAL CAP	6							
12	2	119717-02411	BUSH, CAMSHAFT	1							
13	2	27241-120000	PLUG, 12	1							
14	2	719717-02901	BEARING, MAIN	3							1
26	2	119717-02930	BEARING, THRUST	2							
29	1	119515-01200	BOLT, HEAD	10							
30	1	119415-01330	GASKET, HEAD	1							
31	1	119810-02941	BEARING, THRUST 0.25	2							2
34	1	719717-02911	BEARING, 0.25 US	3							3

N:Old $\frac{\text{Yes}}{\text{No}}$ New. Q:Old $\frac{\text{No}}{\text{Yes}}$ New, R:Old $\frac{\text{Yes}}{\text{Yes}}$ New, S:Old $\frac{\text{No}}{\text{No}}$ New, W:Add, Z:Discontinued, F:Interchangeable by set, K:Q'ty Change

Copyright (C) YANMAR GLOBAL CS CO., LTD. All RightsReserved.

Fig.2. GEAR HOUSING

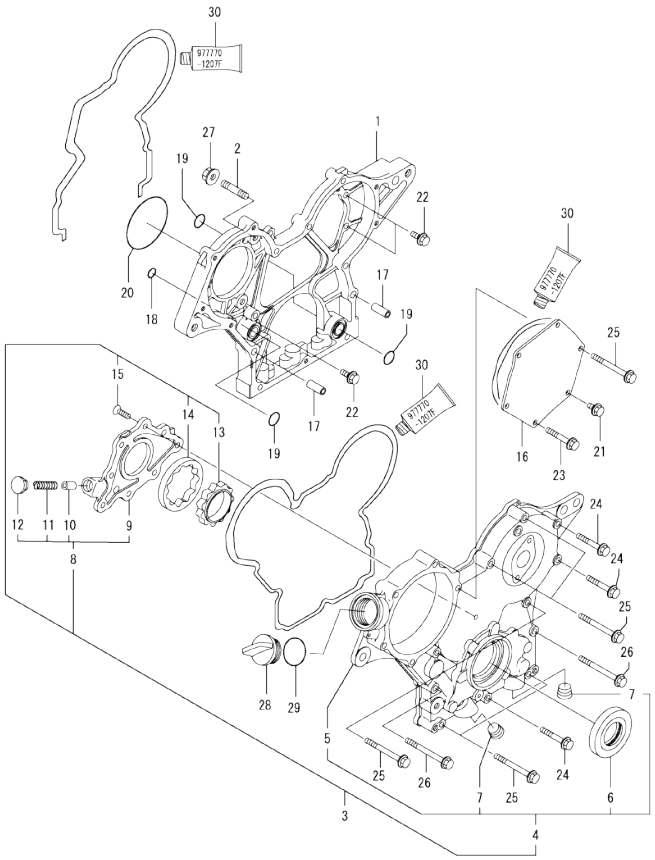

(A)=2TNV70-KAP
(B)=
(C)=
(D)=
(E)=
(F)=

No.	Lev.	Parts No.	Description	Q'ty (A)	(B)	(C)	(D)	(E)	(F)	I	R
1	1	119717-01501	CASE, GEAR	1							
2	1	119717-01570	STUD	3							
3	1	119734-01590	COVER ASSY,GEAR CASE	1							
4	2	719734-01500	COVER ASSY,GEAR CASE	1							
5	3	119717-01521	COVER, GEAR CASE	1							
6	3	119717-01800	SEAL, OIL	1							
7	3	23876-030000	PLUG, R03	2							
8	2	119717-32100	COVER ASSY	1							
9	3	119717-32080	COVER	1							
10	3	129900-32130	VALVE, RELIEF	1							
11	3	129001-32320	SPRING	1							
12	3	129001-32330	PLUG	1							
13	2	119717-32110	ROTOR, INNER	1							
14	2	119717-32120	ROTOR, OUTER	1							
15	2	119802-32130	SCREW, M6X16	8							
16	1	119717-01750	COVER	1							
17	1	119660-01911	PIPE, KNOCK	4							
18	1	119624-32040	O-RING, P12.0	1							
19	1	119717-32050	O-RING, P17.0	3							
20	1	121850-51960	O-RING	1							
21	1	26106-060122	BOLT, M6X 12 PLATED	1							
22	1	26106-060162	BOLT, M6X 16 PLATED	4							
23	1	26106-060402	BOLT, M6X 40 PLATED	4							
24	1	26106-060402	BOLT, M6X 40 PLATED	3							
25	1	26106-060602	BOLT, M6X 60 PLATED	7							
26	1	26106-060652	BOLT, M6X 65 PLATED	2							
27	1	26306-080002	NUT, M8	3							
28	1	124160-01751	COVER, FILLER	1							
29	1	24311-000320	O-RING, 1AP32.0	1							
30	1	977770-1207F	GASKET.LIQUID	1							1

Remarks
(1) OPTIONAL PART.

N:Old ←Yes/No→ New. Q:Old ←No/Yes→ New. R:Old ←Yes/Yes→ New. S:Old ←No/No→ New. W:Add. Z:Discontinued. F:Interchangeable by set. K:Q'ty Change

Copyright (C) YANMAR GLOBAL CS CO., LTD. All RightsReserved.

Fig.3. MOUNTING FLANGE & OIL SUMP

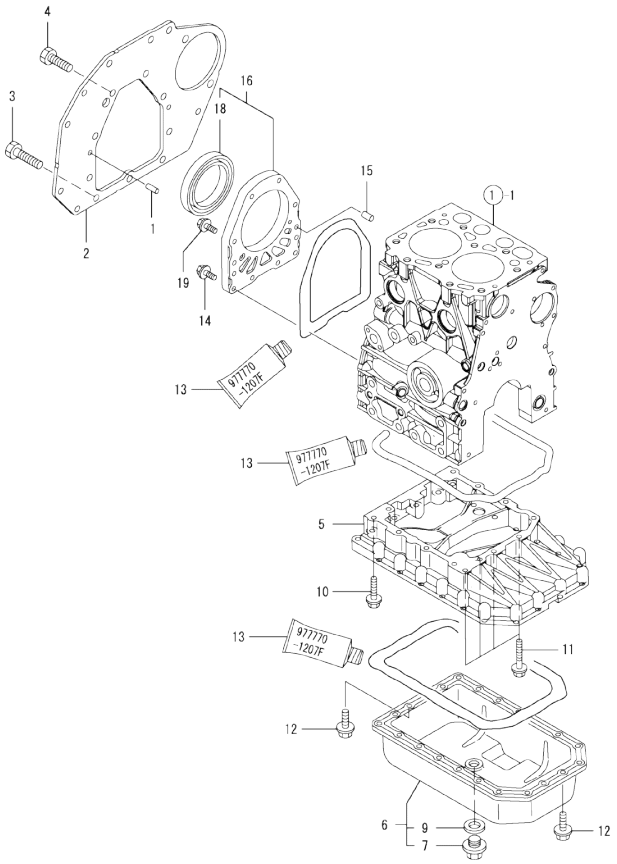

Remarks
(1) OPTIONAL PART.

(A)=2TNV70-KAP (D)=
(B)= (E)=
(C)= (F)=

No.	Lev.	Parts No.	Description	Q'ty (A)	(B)	(C)	(D)	(E)	(F)	I	R
1	1	129100-01580	PIN, M8X16	2							
2	1	119718-01600	FLANGE, MOUNTING	1							
3	1	26206-100252	BOLT, M10X 25 PLATED	3							
4	1	26206-100202	BOLT, M10X 20 PLATED	7							
5	1	119415-01741	SPACER, OIL SUMP	1							
6	1	119810-01790	SUMP ASSY, OIL	1							
7	2	119640-01640	PLUG, DRAIN M22	1							
9	2	22190-220002	WASHER, SEAL 22	1							
10	1	26106-060452	BOLT, M6X 45 PLATED	10							
11	1	26106-060602	BOLT, M6X 60 PLATED	4							
12	1	26106-080122	BOLT, M8X 12 PLATED	22							
13	1	977770-1207F	GASKET.LIQUID	1							1
14	1	119285-01580	BOLT, M46X22	4							
15	1	119620-01620	PIN, M6X10	2							
16	1	119718-01640	CASE ASSY, OIL SEAL	1							
18	2	119734-02220	SEAL, OIL	1							
19	1	26106-060222	BOLT, M6X 22 PLATED	6							

N:Old ←Yes/No→ New. Q:Old ←No/Yes→ New, R:Old ←Yes/Yes→ New, S:Old ←No/No→ New. W:Add. Z:Discontinued. F:Interchangeable by set. K:Q'ty Change

Copyright (C) YANMAR GLOBAL CS CO., LTD. All RightsReserved.

Fig.4. CYLINDER HEAD & BONNET

(A)=2TNV70-KAP
(B)=
(C)=
(D)=
(E)=
(F)=

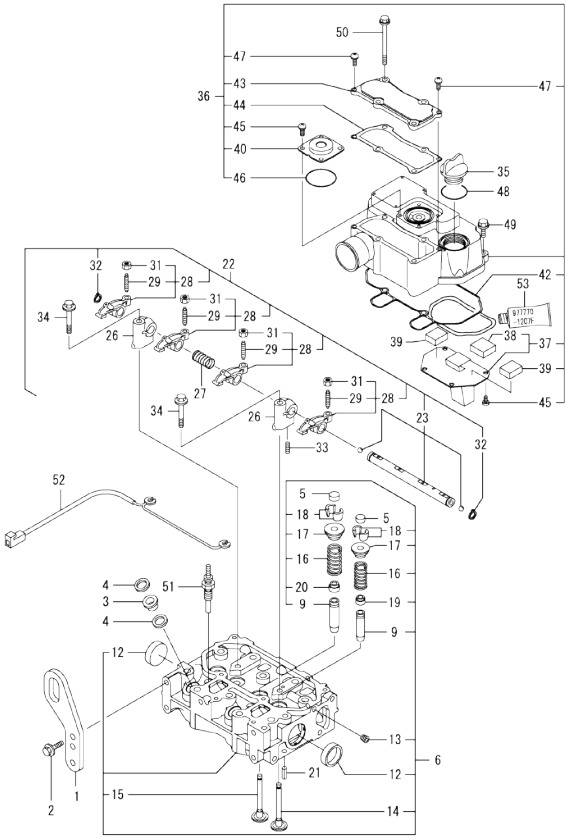

No.	Lev.	Parts No.	Description	Q'ty (A)	(B)	(C)	(D)	(E)	(F)	I	R
1	1	129486-07901	LIFTER	1							
2	1	26106-080142	BOLT, M8X 14 PLATED	2							
3	1	129901-11450	PROTECTOR, NOZZLE	2							
4	1	119600-11460	GASKET, NOZZLE	4							
5	1	105010-11490	CAP, VALVE	4							
6	1	119415-11740	HEAD ASSY, CYLINDER	1							
9	2	119515-11800	GUIDE, VALVE	4							1
12	2	119285-11990	PLUG, 35	2							
13	2	23876-005000	PLUG, R005	1							
14	2	119515-11101	VALVE, INTAKE	2							
15	2	119515-11110	VALVE, EXHAUST	2							
16	2	119717-11131	SPRING, VALVE	4							
17	2	129508-11180	RETAINER, SPRING	4							
18	2	119717-11190	COTTER	8							
19	2	119717-11340	SEAL, VALVE STEM	2							
20	2	119717-11350	SEAL, VALVE STEM	2							
21	1	22351-060012	PIN, SPRING 6.0X12	2							
22	1	119415-11200	SUPPORT ASSY, ARM	1							
23	2	119415-11240	SHAFT ASSY, ROCKER	1							
26	2	119717-11260	SUPPORT, ROCKER ARM	2							
27	2	119515-11280	SPRING	1							
28	2	119717-11650	ARM, ROCKER	4							
29	3	129150-11230	SCREW, VALVE ADJUST	4							
31	3	129150-11750	NUT, M8	4							
32	2	22242-000120	RING, 12	2							
33	2	26979-050162	SCREW, M5X16	1							
34	1	26106-080402	BOLT, M8X 40 PLATED	2							
35	1	124160-01751	COVER, FILLER	1							
36	1	119416-11380	BONNET ASSY, HEAD	1							
37	2	119717-03031	PLATE	1							
38	3	119717-03070	BAFFLE, BREATHER	1							
39	2	119717-03070	BAFFLE, BREATHER	2							
40	2	129006-03120	COVER, DIAPHRAGM	1							
42	2	119415-11310	GASKET, BONNET	1							
43	2	119415-11320	COVER, BONNET	1							
44	2	119415-11330	GASKET	1							
45	2	22857-500100	SCREW, 5X10	8							
46	2	24341-000400	O-RING, 1AS40.0	1							
47	2	22857-500160	SCREW, 5X16	2							
48	1	24311-000320	O-RING, 1AP32.0	1							
49	1	26106-060202	BOLT, M6X 20 PLATED	2							
50	1	26106-060752	BOLT, M6X 75 PLATED	4							
51	1	119718-77800	PLUG, GLOW	2							
52	1	119415-77820	CONNECTOR, GLOW PLUG	1							
53	1	977770-1207F	GASKET.LIQUID	1							2

Remarks
(1) REPAIR PART.
(2) OPTIONAL PART.

N:Old $\frac{\text{Yes}}{\text{No}}$ New. Q:Old $\frac{\text{No}}{\text{Yes}}$ New. R:Old $\frac{\text{Yes}}{\text{Yes}}$ New. S:Old $\frac{\text{No}}{\text{No}}$ New. W:Add. Z:Discontinued. F:Interchangeable by set. K:Q'ty Change

Copyright (C) YANMAR GLOBAL CS CO., LTD. All RightsReserved.

Fig.5. EXHAUST MANIFOLD

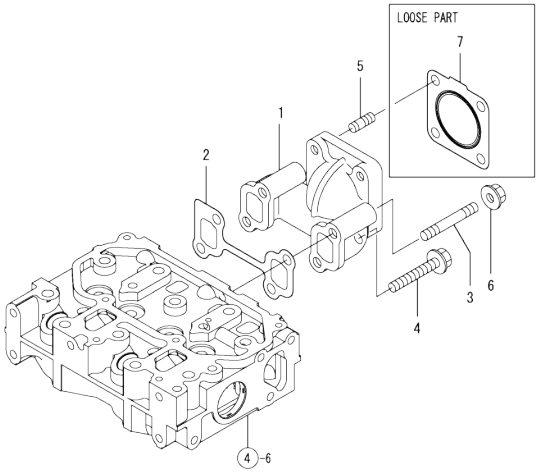

(A)=2TNV70-KAP (D)=
(B)= (E)=
(C)= (F)=

No.	Lev.	Parts No.	Description	Q'ty (A)	(B)	(C)	(D)	(E)	(F)	I	R
1	1	119415-13100	MANIFOLD, EXHAUST	1							
2	1	119415-13110	GASKET	1							
3	1	119717-13600	STUD, M8X50	2							
4	1	119802-13620	BOLT, M8X50	2							
5	1	119131-18320	STUD, M8X22	4							
6	1	26306-080002	NUT, M8	2							
7	1	119515-13200	GASKET, SILENCER	1							

N:Old ◄Yes/No► New. Q:Old ◄No/Yes► New, R:Old ◄Yes/Yes► New, S:Old ◄No/No► New, W:Add, Z:Discontinued, F:Interchangeable by set, K:Q'ty Change

Copyright (C) YANMAR GLOBAL CS CO., LTD. All RightsReserved.

Fig.6. CAMSHAFT & DRIVING GEAR

(A)=2TNV70-KAP (D)=
(B)= (E)=
(C)= (F)=

No.	Lev.	Parts No.	Description	Q'ty (A)	(B)	(C)	(D)	(E)	(F)	I	R
1	1	119620-14200	TAPPET	4							
2	1	119515-14400	ROD, PUSH	4							
3	1	119415-14581	CAMSHAFT ASSY	1							
8	1	26106-060122	BOLT, M6X 12 PLATED	2							
9	1	119717-25050	SHAFT, IDLE	1							
10	1	119717-25101	GEAR ASSY, IDLE	1							
13	1	26106-060352	BOLT, M6X 35 PLATED	3							
14	1	129150-25301	BOLT	4							
15	1	119717-25930	GEAR, PUMP	1							
16	1	119717-51150	FLANGE	1							
17	1	22217-120000	WASHER, SPRING 12	1							
18	1	26716-120002	NUT, M12	1							

N:Old ←Yes/No→ New. Q:Old ←No/Yes→ New. R:Old ←Yes/Yes→ New. S:Old ←No/No→ New. W:Add. Z:Discontinued. F:Interchangeable by set. K:Q'ty Change

Copyright (C) YANMAR GLOBAL CS CO., LTD. All RightsReserved.

Fig.7. CRANKSHAFT & PISTON

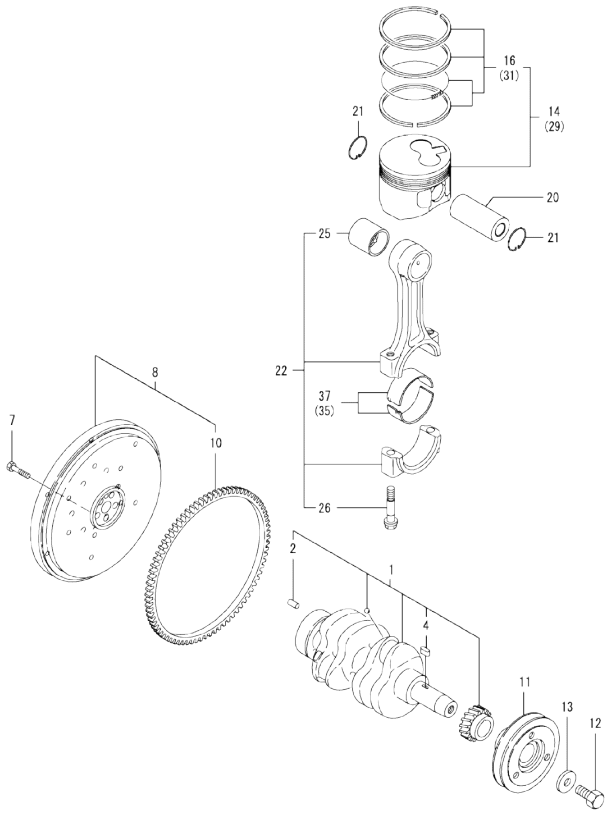

(A)=2TNV70-KAP
(B)=
(C)=
(D)=
(E)=
(F)=

No.	Lev.	Parts No.	Description	Q'ty (A)	(B)	(C)	(D)	(E)	(F)	I	R
1	1	119415-21700	CRANKSHAFT ASSY	1							
2	2	129100-01580	PIN, M8X16	1							
4	2	22512-040120	KEY, 4X 12	1							
7	1	119620-21500	BOLT, FLYWHEEL	5							
8	1	119415-21600	FLYWHEEL ASSY	1							
10	2	124060-21600	GEAR, RING	1							
11	1	119717-21650	V-PULLEY	1							
12	1	119621-21680	BOLT, FLANGE 12X1.25	1							
13	1	119620-21941	WASHER	1							
14	1	119516-22020	PISTON ASSY	2							
16	2	119515-22500	RING SET, PISTON	2							
20	1	119515-22300	PIN, PISTON	2							
21	1	22252-000220	RING, 22	4							
22	1	119515-23000	ROD ASSY, CONNECTING	2							
25	2	119717-23910	BEARING, PISTON PIN	2							1
26	2	119717-23200	BOLT, CONNECTING ROD	4							
29	1	119516-22030	PISTON ASSY, 0.25 OS	2							3
31	2	119515-22550	RING SET, 0.25 OS	2							3
35	1	119515-23611	METAL ASSY, 0.25	2							2
37	1	119515-23601	BEARING, CRANK PIN	2							

Remarks
(1) REPAIR PART.
(2) UNDER-SIZE(U.S=0.25)PART.
(3) OVER-SIZE(O.S=0.25)PART.

N:Old ◄Yes/No► New. Q:Old ◄No/Yes► New. R:Old ◄Yes/Yes► New. S:Old ◄No/No► New. W:Add. Z:Discontinued. F:Interchangeable by set. K:Q'ty Change

Copyright (C) YANMAR GLOBAL CS CO., LTD. All RightsReserved.

Fig.8. LUB.OIL SYSTEM

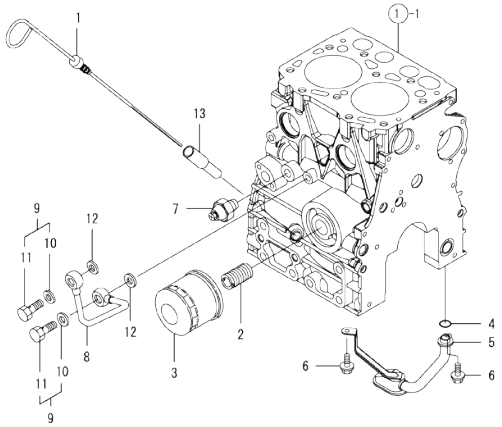

(A)=2TNV70-KAP
(B)=
(C)=
(D)=
(E)=
(F)=

No.	Lev.	Parts No.	Description	Q'ty (A)	(B)	(C)	(D)	(E)	(F)	I	R
1	1	119446-34801	DIPSTICK, OIL	1							
2	1	129100-35140	STUD	1							
3	1	119305-35170	FILTER ASSY, D68XL65	1							1
4	1	119717-32060	O-RING, P15.0	1							
5	1	119446-35080	PIPE ASSY, OIL INLET	1							
6	1	26106-060102	BOLT, M6X 10 PLATED	2							
7	1	121252-39450	SWITCH, 0.5KG	1							
8	1	119415-39211	PIPE, OIL	1							
9	1	129005-59830	BOLT ASSY, JOINT M8	2							
10	2	22190-080002	WASHER, SEAL 6	2							
11	2	23857-030000	BOLT, JOINT 3	2							
12	1	22190-080002	WASHER, SEAL 6	2							
13	1	121520-34810	GUIDE, DIPSTICK	1							

Remarks
(1) REPAIR PART.

N:Old ←Yes/No→ New. Q:Old ←No/Yes→ New. R:Old ←Yes/Yes→ New. S:Old ←No/No→ New. W:Add. Z:Discontinued. F:Interchangeable by set. K:Q'ty Change

Copyright (C) YANMAR GLOBAL CS CO., LTD. All RightsReserved.

Fig.9. COOLING WATER SYSTEM

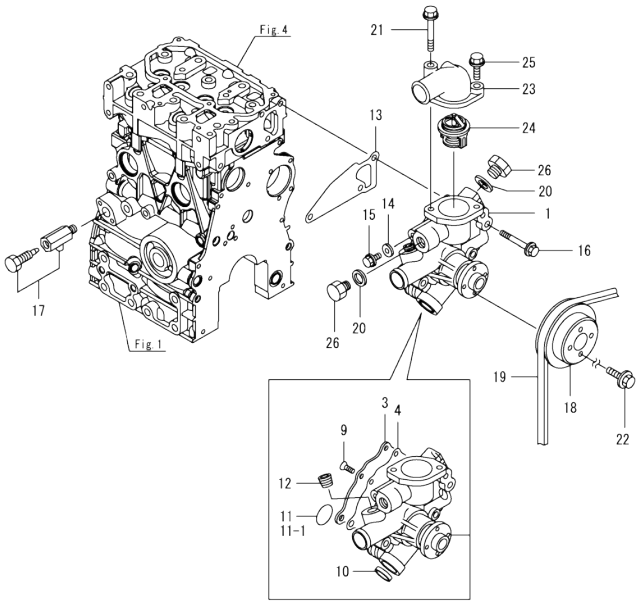

(A)=2TNV70-KAP (D)=
(B)= (E)=
(C)= (F)=

No.	Lev.	Parts No.	Description	Q'ty (A)	(B)	(C)	(D)	(E)	(F)	I	R
1	1	119540-42000	PUMP ASSY, WATER	1							
1-1	1	119C10-42000	PUMP ASSY, WATER	1						N	
	(A=*2012.03.)										
3	2	119515-42041	COVER	1							
4	2	119717-42031	GASKET	1							
9	2	26577-060122	SCREW, M6X12	4							
10	2	27241-250000	PLUG, 25	1							
11	2	119717-42320	O-RING, P26	1							
11-1	2	119C10-42320	O-RING, 2028	1						S	
	(A=*2012.03.)										
12	2	129916-49740	PLUG, R3/8	1							
13	1	119515-42020	GASKET, WATER PUMP	1							
14	1	23414-080000	GASKET, 8X1.0	1							
15	1	26106-080122	BOLT, M8X 12 PLATED	1							
16	1	26106-080502	BOLT, M8X 50 PLATED	3							
17	1	119620-49290	COCK ASSY, 1/4	1							
18	1	119515-42350	V-PULLEY, D=110	1							
19	1	171001-42290	V-BELT, A35.5	1							
20	1	124465-44950	GASKET, 16	2							
21	1	26106-080652	BOLT, M8X 65 PLATED	1							
22	1	26106-060122	BOLT, M6X 12 PLATED	4							
23	1	124101-49531	COVER, THERMOSTAT	1							
24	1	119718-49800	THERMOSTAT, 82	1							
25	1	26106-080252	BOLT, M8X 25 PLATED	1							
26	1	121450-42450	PLUG, M16	2							

N:Old ←Yes/No→ New. Q:Old ←No/Yes→ New. R:Old ←Yes/Yes→ New. S:Old ←No/No→ New. W:Add. Z:Discontinued. F:Interchangeable by set. K:Q'ty Change

Copyright (C) YANMAR GLOBAL CS CO., LTD. All RightsReserved.

Fig.10. FUEL INJECTION PUMP

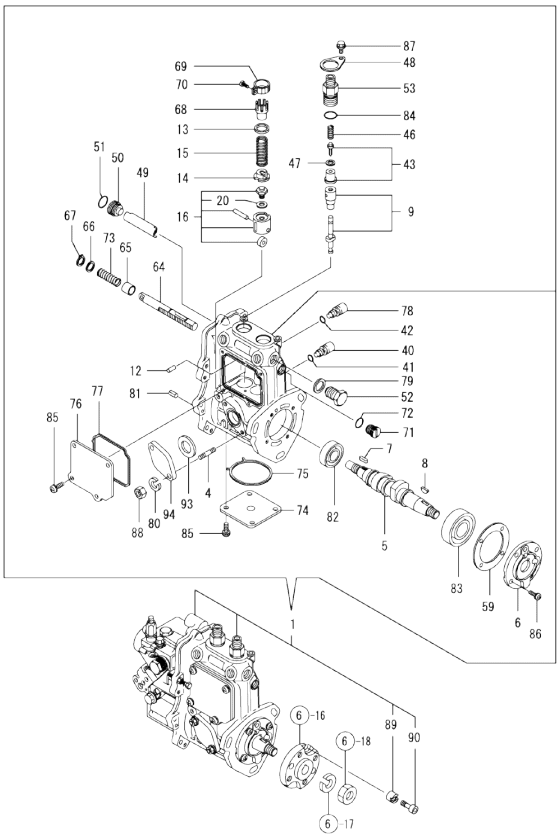

Remarks
(1) GOVERNOR ASSY(FIG.11) IS INCORPORATED IN THIS FOP.CMP (REF.NO.1).

(A)=2TNV70-KAP (D)=
(B)= (E)=
(C)= (F)=

No.	Lev.	Parts No.	Description	Q'ty (A)	(B)	(C)	(D)	(E)	(F)	I	R
1	1	719415-51380	PUMP ASSY, INJECTION	1							1
4	2	129155-51020	STUD	2							
5	2	119415-51030	CAMSHAFT	1							
6	2	119717-51060	SUPPORT, CAMSHAFT	1							
7	2	119717-51070	KEY	1							
8	2	122710-51090	KEY	1							
9	2	119515-51100	PLUNGER ASSY	2							
12	2	129155-51140	PIN	2							
13	2	158600-51170	RETAINER, SPRING	2							
14	2	119717-51570	RETAINER, SPRING	2							
15	2	119717-51190	SPRING, PLUNGER	2							
16	2	119717-51200	TAPPET ASSY	2							
20	3	129155-51600	SHIM SET, ADJUSTING	2							
40	2	158600-51270	STOPPER, TAPPET	2							
41	2	129155-51280	O-RING, S6	2							
42	2	129155-51280	O-RING, S6	1							
43	2	119717-51300	VALVE ASSY, DELIVERY	2							
46	2	119717-51330	SPRING, DELIVERY	2							
47	2	124550-51350	GASKET, DELIVERY	2							
48	2	118400-51370	LOCKING	2							
49	2	119415-51400	PROTECTOR	1							
50	2	158600-51410	PLUG, DEFLECTOR	1							
51	2	119717-51420	O-RING	1							
52	2	158600-51420	PLUG, DEFLECTOR	1							
53	2	158600-51442	VALVE ASSY, DELIVERY	2							
59	2	129155-51450	SHIM SET, ADJUSTING	1							
64	2	119415-51500	RACK, CONTROL	1							
65	2	129155-51521	BUSH, RACK	1							
66	2	129155-51530	SPACER	1							
67	2	129155-51540	CIRCLIP	1							
68	2	129155-51550	PINION, CONTROL	2							
69	2	129100-51560	PINION	2							
70	2	129100-51570	SCREW	2							
71	2	158600-51570	PLUG	1							
72	2	129155-51580	O-RING	1							
73	2	129155-51591	SPRING, RACK	1							
74	2	119415-51700	COVER	1							
75	2	119415-51710	GASKET	1							
76	2	119415-51750	COVER	1							
77	2	119415-51760	GASKET	1							
78	2	158600-51790	STOOPER, RACK	1							
79	2	22190-160002	WASHER, SEAL 16	1							
80	2	22217-060000	WASHER, SPRING 6	2							
81	2	22351-050010	PIN, SPRING 5.0X10	2							
82	2	24101-060034	BEARING, BALL 6003	1							
83	2	24101-063034	BEARING, BALL 6303	1							
84	2	24316-000150	O-RING, 4DP15.0	2							
85	2	26022-050122	SCREW, M5X12	8							
86	2	26022-060162	SCREW, M6X16	4							
87	2	26106-050102	BOLT, M5X 10 PLATED	2							
88	2	26716-060002	NUT, M6	2							

N:Old ←Yes/No→ New. Q:Old ←No/Yes→ New. R:Old ←Yes/Yes→ New. S:Old ←No/No→ New. W:Add. Z:Discontinued. F:Interchangeable by set. K:Q'ty Change

++ CONTINUE ++

Copyright (C) YANMAR GLOBAL CS CO., LTD. All RightsReserved.

Fig.10. FUEL INJECTION PUMP

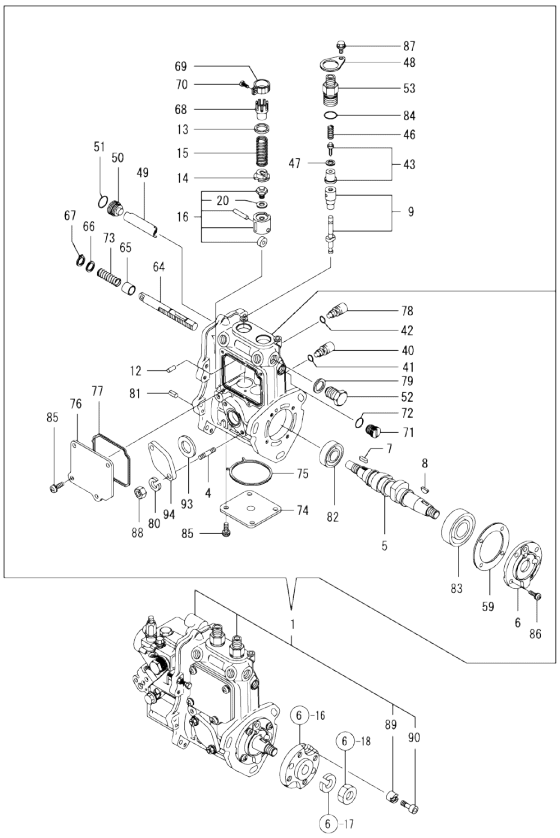

Remarks
(1) GOVERNOR ASSY(FIG.11) IS INCORPORATED IN THIS FOP.CMP (REF.NO.1).

(A)=2TNV70-KAP (D)=
(B)= (E)=
(C)= (F)=

No.	Lev.	Parts No.	Description	Q'ty (A)	(B)	(C)	(D)	(E)	(F)	I	R
89	2	119717-51480	COLLAR	1							
90	2	119717-51490	BOLT	1							
93	2	129155-52051	GASKET	1							
94	2	129100-52200	COVER	1							

N:Old ←Yes/No→ New. Q:Old ←No/Yes→ New. R:Old ←Yes/Yes→ New. S:Old ←No/No→ New. W:Add. Z:Discontinued. F:Interchangeable by set. K:Q'ty Change

Copyright (C) YANMAR GLOBAL CS CO., LTD. All RightsReserved.

Fig.11. GOVERNOR

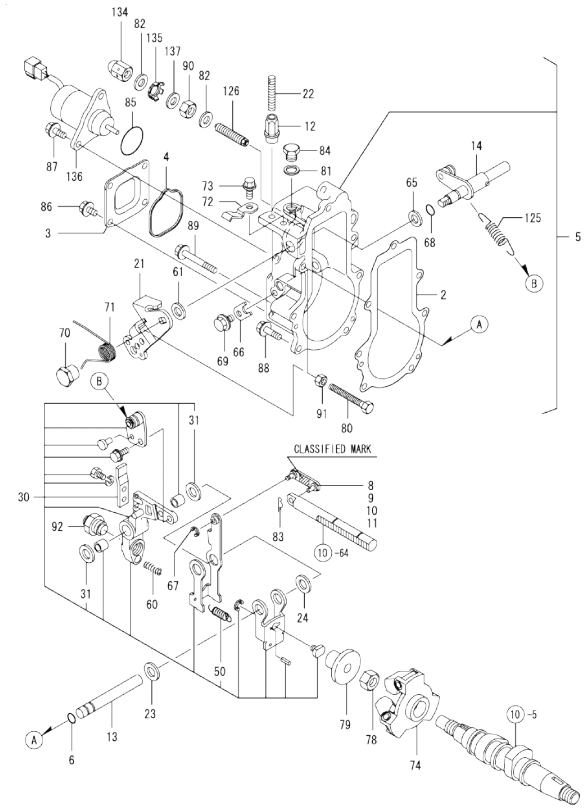

Remarks
(1) SELECTIVE PARTS;CERTAIN THE CLASSIFICATION MARK,THEN PLACE YOUR ORDER.(REF.TO.ILLUSTRATION).
* THIS FIGURE(GOVERNOR ASSY)IS INCORPORATED IN THE FUEL INJECTION PUMP ASSY(FIG.10).

(A)=2TNV70-KAP (D)=
(B)= (E)=
(C)= (F)=

No.	Lev.	Parts No.	Description	Q'ty (A)	(B)	(C)	(D)	(E)	(F)	I	R
2	2	119717-61050	GASKET	1							
3	2	119717-61060	COVER, GOVERNOR CASE	1							
4	2	119717-61070	GASKET	1							
5	2	119515-61200	CASE ASSY, GOVERNOR	1							
6	3	129155-51280	O-RING, S6	1							
8	3	119717-61120	LINK, MARK :3	1							1
9	3	119717-61130	LINK, MARK 98	1							1
10	3	119717-61140	LINK, MARK 88	1							1
11	3	119717-61150	LINK, MARK 03	1							1
12	3	129209-61370	NUT, M6	1							
13	3	129052-61390	SHAFT	1							
14	3	119717-61400	SHAFT ASSY	1							
21	3	119515-61440	LEVER, CONTROL	1							
22	3	129155-61450	BOLT, LIMITER	1							
23	3	129156-61460	SHIM, T=0.6	1							
24	3	129155-61480	SPACER ASSY	1							
30	3	119516-61500	LEVER ASSY, GOVERNOR	1							
31	4	174307-51700	SHIM SET	2							
50	4	129486-61540	SPRING, SET	1							
60	3	129486-61650	SPRING, STARTING	1							
61	3	158552-61700	SHIM SET	1							
65	3	158552-61710	SHIM, T=1.0	1							
66	3	119660-61901	RETAINER, SHAFT	1							
67	3	22272-000030	RING, E- 3	1							
68	3	24341-000070	O-RING, 1AS7.0	1							
69	3	26106-060102	BOLT, M6X 10 PLATED	1							
70	3	129255-61410	NUT, LOCK	1							
71	3	119534-61420	SPRING	1							
72	3	119534-61430	RETAINER	1							
73	3	26106-060102	BOLT, M6X 10 PLATED	1							
74	2	119717-61200	WEIGHT ASSY,GOVERNOR	1							
78	2	119660-61300	NUT	1							
79	2	129155-61341	SLEEVE	1							
80	2	129155-61460	BOLT, IDLE	1							
81	2	22190-100002	WASHER, SEAL 10	1							
82	2	22190-120002	WASHER, SEAL 12	2							
83	2	22372-040000	PIN, SNAP 4	1							
84	2	23887-100002	PLUG, 10	1							
85	2	158552-61900	O-RING	1							
86	2	26106-060102	BOLT, M6X 10 PLATED	4							
87	2	26106-060142	BOLT, M6X 14 PLATED	2							
88	2	26106-060202	BOLT, M6X 20 PLATED	4							
89	2	26106-060452	BOLT, M6X 45 PLATED	3							
90	2	26736-120002	NUT, M12	1							
91	2	26756-060002	NUT, LOCK M6	1							
92	2	119515-61550	ANGLEICH ASSY	1							
125	2	119717-61700	SPRING, GOVERNOR	1							
126	2	158601-61710	LIMITER ASSY, FUEL	1							
134	2	129209-61930	NUT, CAP	1							
135	2	129209-61970	PLATE	1							
136	2	119653-77950	SOLENOID, STOP	1							

N:Old ←Yes/No→ New. Q:Old ←No/Yes→ New. R:Old ←Yes/Yes→ New. S:Old ←No/No→ New. W:Add. Z:Discontinued. F:Interchangeable by set. K:Q'ty Change

++ CONTINUE ++

Copyright (C) YANMAR GLOBAL CS CO., LTD. All RightsReserved.

Fig.11. GOVERNOR

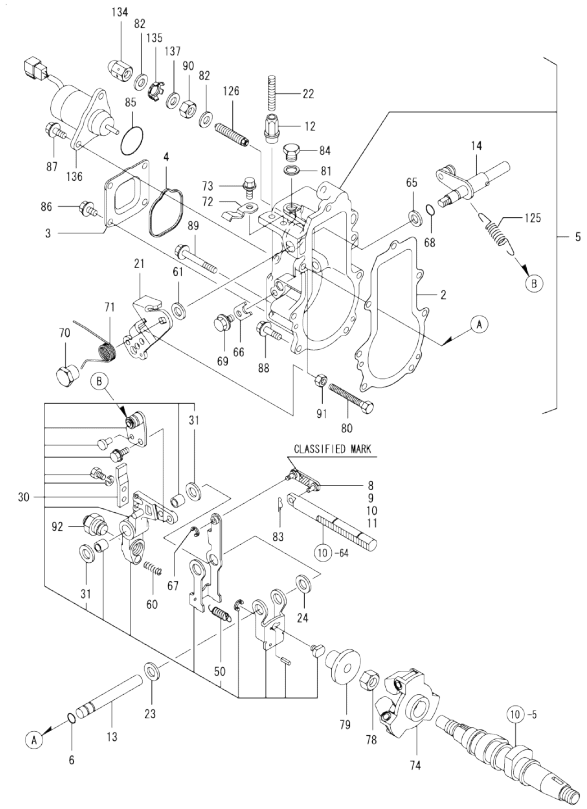

Remarks
(1) SELECTIVE PARTS;CERTAIN THE CLASSIFICATION MARK,THEN PLACE YOUR ORDER.(REF.TO.ILLUSTRATION).
* THIS FIGURE(GOVERNOR ASSY)IS INCORPORATED IN THE FUEL INJECTION PUMP ASSY(FIG.10).

(A)=2TNV70-KAP
(B)=
(C)=
(D)=
(E)=
(F)=

No.	Lev.	Parts No.	Description	Q'ty (A)	(B)	(C)	(D)	(E)	(F)	I	R
137	2	23414-120016	GASKET, 12X1.0	1							

N:Old ←Yes/No→ New. Q:Old ←No/Yes→ New. R:Old ←Yes/Yes→ New. S:Old ←No/No→ New. W:Add. Z:Discontinued. F:Interchangeable by set. K:Q'ty Change

Copyright (C) YANMAR GLOBAL CS CO., LTD. All RightsReserved.

Fig.12. FUEL INJECTION VALVE

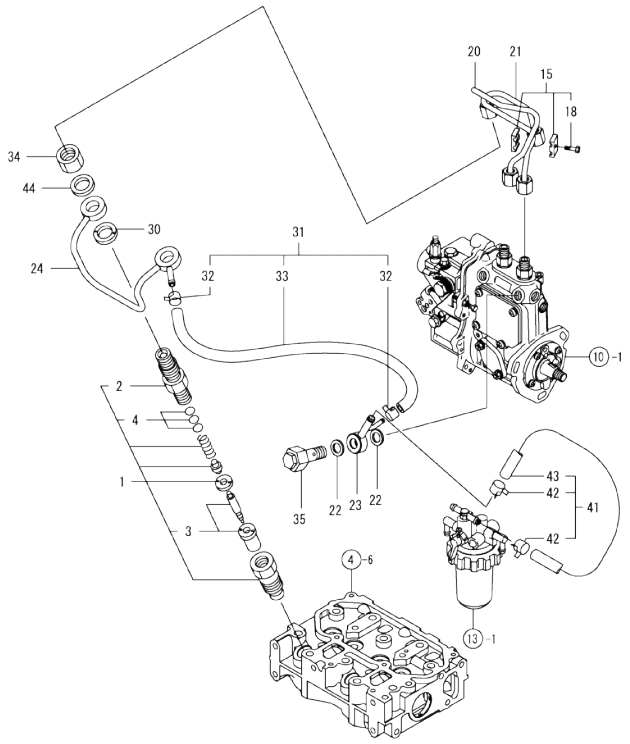

(A)=2TNV70-KAP
(B)=
(C)=
(D)=
(E)=
(F)=

No.	Lev.	Parts No.	Description	Q'ty (A)	(B)	(C)	(D)	(E)	(F)	I	R
1	1	119515-53001	VALVE ASSY,INJECTION	2							
2	2	118200-53010	HOLDER, NOZZLE	2							
3	2	119515-53010	VALVE ASSY,INJECTION	2							
4	2	129901-53800	SHIM SET, ADJUSTING	2							1
15	1	119305-59120	RETAINER, PIPE	1							
18	2	129150-59131	BOLT, M4X14	1							
20	1	119415-59810	PIPE ASSY, INJECTION	1							
21	1	119415-59820	PIPE ASSY, INJECTION	1							
22	1	22190-120002	WASHER, SEAL 12	2							
23	1	119840-59570	JOINT	1							
24	1	119415-59540	PIPE ASSY, RETURN	1							
30	1	129901-59560	GASKET	2							
31	1	119540-59570	PIPE ASSY, RETURN	1							
32	2	124066-59100	CLIP, HOSE 8	2							
33	2	119540-59560	PIPE ASSY, RETURN	1							
34	1	119620-59700	NUT, NOZZLE	2							
35	1	119813-59950	VALVE ASSY, CHECK	1							
41	1	129210-59110	PIPE ASSY, FUEL	1							
42	2	124766-59050	CLIP, HOSE 12	2							
43	2	105025-59560	PIPE, FUEL	1							
44	2	22190-120002	WASHER, SEAL 12	2							

Remarks
(1) REPAIR PART.

N:Old $\frac{\text{Yes}}{\text{No}}$ New. Q:Old $\frac{\text{No}}{\text{Yes}}$ New. R:Old $\frac{\text{Yes}}{\text{Yes}}$ New. S:Old $\frac{\text{No}}{\text{No}}$ New. W:Add. Z:Discontinued. F:Interchangeable by set. K:Q'ty Change

Copyright (C) YANMAR GLOBAL CS CO., LTD. All RightsReserved.

Fig.13. FUEL LINE

(A)=2TNV70-KAP
(B)=
(C)=
(D)=
(E)=
(F)=

No.	Lev.	Parts No.	Description	Q'ty (A)	(B)	(C)	(D)	(E)	(F)	I	R
1	1	119833-55620	FILTER ASSY, FUEL	1							
2	2	104200-55330	SPRING, VALVE	1							
3	2	119810-55340	LEVER	1							
4	2	121254-55510	COVER	1							
5	2	102103-55520	O-RING	1							
6	2	110250-55610	RING, RETAINING	1							
7	2	121250-55620	SPRING	1							
8	2	119810-55650	ELEMENT	1							
9	2	104200-55750	SCREW, M4	1							
10	2	24311-240100	O-RING, 1AP10A	1							
11	1	26014-080702	BOLT, M8X 70	1							
12	1	103854-39140	BOLT, PIPE JOINT	1							
13	1	101304-59020	JOINT, PIPE 12	1							
14	1	129210-59050	PIPE ASSY, FUEL	1							
15	2	124766-59050	CLIP, HOSE 12	2							
16	2	105312-59510	PIPE, FUEL	1							
17	1	22190-120002	WASHER, SEAL 12	2							
18	1	119717-55650	BRACKET, FILTER	1							
19	1	26106-080162	BOLT, M8X 16 PLATED	2							
20	1	129335-55700	SEPARATOR ASSY,WATER	1							
21	2	24311-240100	O-RING, 1AP10A	1							
22	2	104200-55321	VALVE, TAPER	1							
23	2	104200-55330	SPRING, VALVE	1							
24	2	104200-55341	HANDLE	1							
25	2	124064-55510	COVER	1							
26	2	102103-55520	O-RING	1							
27	2	110250-55610	RING, RETAINING	1							
28	2	121257-55720	SPRING	1							
29	2	121257-55731	FLOAT	1							
31	2	101720-55750	PLUG, 6	2							
32	2	104200-55750	SCREW, M4	1							
33	2	171081-55910	SCREEN	1							
34	2	23418-060000	GASKET, 6X1.0	2							
35	1	119225-52102	PUMP ASSY, FUEL FEED	1							

N:Old $\xleftarrow[\text{No}]{\text{Yes}}$ New. Q:Old $\xleftarrow[\text{Yes}]{\text{No}}$ New. R:Old $\xleftarrow[\text{Yes}]{\text{Yes}}$ New. S:Old $\xleftarrow[\text{No}]{\text{No}}$ New. W:Add. Z:Discontinued. F:Interchangeable by set. K:Q'ty Change

Copyright (C) YANMAR GLOBAL CS CO., LTD. All RightsReserved.

Fig.14. STARTING MOTOR

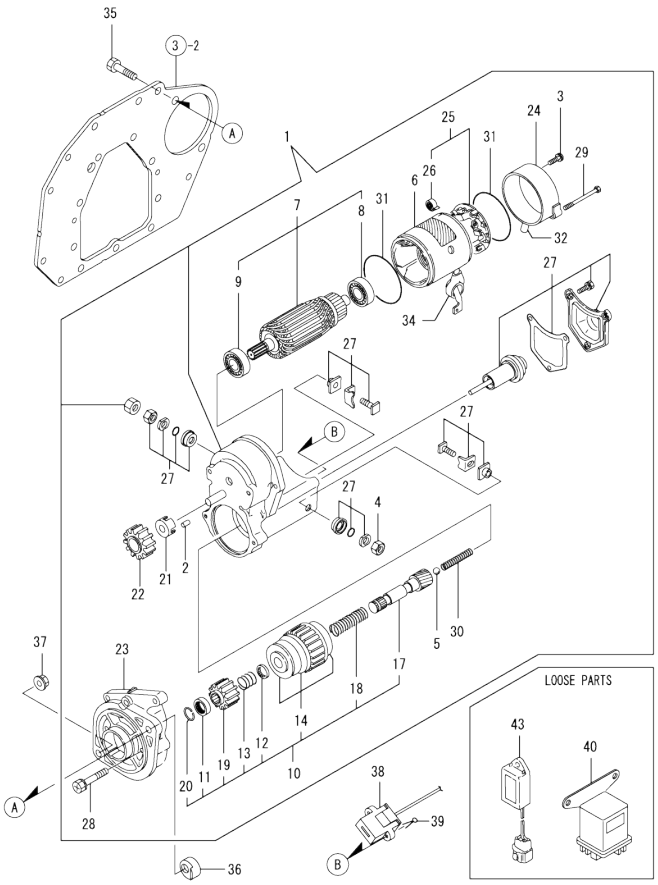

(A)=2TNV70-KAP
(B)=
(C)=
(D)=
(E)=
(F)=

No.	Lev.	Parts No.	Description	Q'ty (A)	(B)	(C)	(D)	(E)	(F)	I	R
1	1	129129-77010	STARTER ASSY	1							
2	2	X0283060061	ROLLER	5							
3	2	129129-77460	SCREW	2							
4	2	X9490561370	NUT	1							
5	2	X9491200240	BALL	1							
6	2	129129-77210	YOKE ASSY	1							
7	2	129129-77220	ARMATURE ASSY	1							
8	3	129129-77230	BEARING	1							
9	3	129129-77240	BEARING	1							
10	2	129129-77250	STARTER	1							
11	3	X0280210230	NUT	1							
12	3	X0283270140	RETAINER	1							
13	3	X9491703371	SPRING, COIL	1							
14	3	129129-77390	CLUTCH ASSY, STARTER	1							
17	3	129129-77400	SHAFT	1							
18	3	129129-77410	SPRING, COIL	1							
19	3	129129-77420	PINION	1							
20	3	129129-77430	RING	1							
21	2	129129-77260	RETAINER	1							
22	2	129129-77270	PINION	1							
23	2	129129-77280	HOUSING	1							
24	2	129129-77290	FRAME	1							
25	2	129129-77300	HOLDER ASSY	1							
26	3	X9491730461	SPRING	4							
27	2	129129-77310	SWITCH ASSY	1							
28	2	129129-77320	BOLT	2							
29	2	129129-77330	BOLT	2							
30	2	129129-77340	SPRING	1							
31	2	129129-77350	O-RING	2							
32	2	129129-77362	COVER	1							
34	2	129129-77380	CAP	1							
35	1	26156-120302	BOLT, M12X 30 PLATED	2							
36	1	119285-77050	NUT	1							
37	1	26376-120002	NUT, M12	1							
38	1	119643-77900	CONNECTOR, STARTER	1							
39	1	22411-200250	COTTER PIN 2.0X25	1							
40	1	119650-77910	RELAY ASSY, GLOW	1							
43	1	129211-77920	TIMER	1							

N:Old ◄Yes/No► New. Q:Old ◄No/Yes► New. R:Old ◄Yes/Yes► New. S:Old ◄No/No► New. W:Add. Z:Discontinued. F:Interchangeable by set. K:Q'ty Change

Copyright (C) YANMAR GLOBAL CS CO., LTD. All RightsReserved.

Fig.15. TENSTION PULLEY

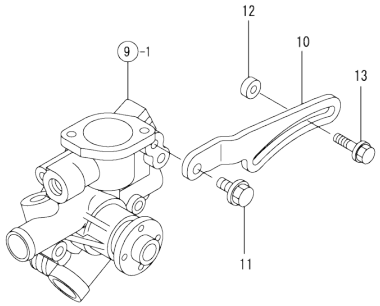

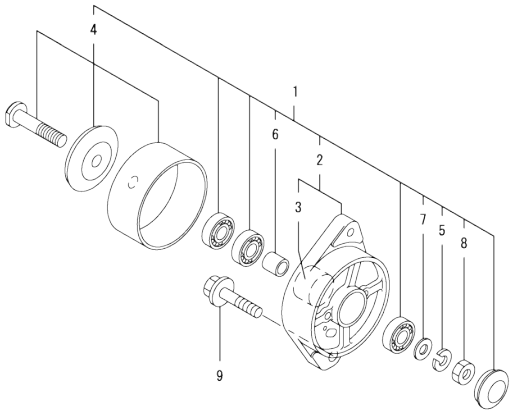

(A)=2TNV70-KAP
(B)=
(C)=
(D)=
(E)=
(F)=

No.	Lev.	Parts No.	Description	Q'ty (A)	(B)	(C)	(D)	(E)	(F)	I	R
1	1	129100-44300	PULLEY, TENSION	1							
2	2	129100-44310	PLATE COMP	1							
3	3	129100-44320	PLATE, COIL	1							
4	2	129100-44330	FLYWHEEL ASSY	1							
5	2	129188-77200	WASHER, SPRING	1							
6	2	129118-77230	COLLAR	1							
7	2	129118-77240	WASHER, 10	1							
8	2	129118-77250	NUT	1							
9	1	26106-100452	BOLT, M10X 45 PLATED	1							
10	1	119742-77300	ADJUSTER	1							
11	1	26106-080202	BOLT, M8X 20 PLATED	1							
12	1	119940-77270	SPACER, GENERATOR	1							
13	1	129972-77341	BOLT, ADJUSTER L=50	1							

N:Old ◄Yes/No► New. Q:Old ◄No/Yes► New. R:Old ◄Yes/Yes► New. S:Old ◄No/No► New. W:Add. Z:Discontinued. F:Interchangeable by set. K:Q'ty Change

Copyright (C) YANMAR GLOBAL CS CO., LTD. All RightsReserved.

Fig.16. GASKET SET

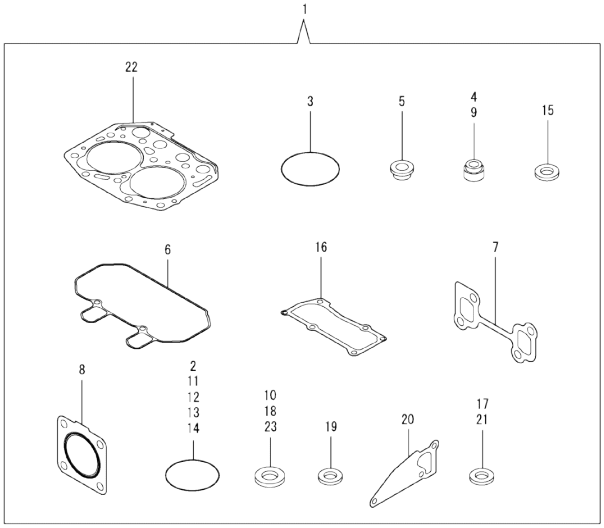

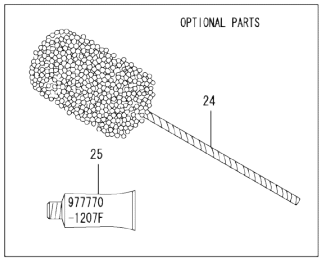

(A)=2TNV70-KAP (D)=
(B)= (E)=
(C)= (F)=

No.	Lev.	Parts No.	Description	Q'ty (A)	(B)	(C)	(D)	(E)	(F)	I	R
1	1	719415-92700	GASKET SET	1							1
2	2	24341-000400	O-RING, 1AS40.0	1							
3	2	121850-51960	O-RING	1							
4	2	119717-11340	SEAL, VALVE STEM	2							
5	2	129901-11450	PROTECTOR, NOZZLE	2							
6	2	119415-11310	GASKET, BONNET	1							
7	2	119415-13110	GASKET	1							
8	2	119515-13200	GASKET, SILENCER	1							
9	2	119717-11350	SEAL, VALVE STEM	2							
10	2	22190-080002	WASHER, SEAL 6	4							
11	2	24311-000320	O-RING, 1AP32.0	2							
12	2	119717-32060	O-RING, P15.0	1							
13	2	119624-32040	O-RING, P12.0	1							
14	2	119717-32050	O-RING, P17.0	3							
15	2	119600-11460	GASKET, NOZZLE	4							
16	2	119415-11330	GASKET	1							
17	2	124465-44950	GASKET, 16	2							
18	2	22190-120002	WASHER, SEAL 12	6							
19	2	129901-59560	GASKET	2							
20	2	119515-42020	GASKET, WATER PUMP	1							
21	2	23414-080000	GASKET, 8X1.0	1							
22	2	119415-01330	GASKET, HEAD	1							
23	2	22190-220002	WASHER, SEAL 22	1							
24	1	129400-92410	FLEX HORN	1							1
25	1	977770-1207F	GASKET.LIQUID	1							1

Remarks
(1) OPTIONAL PART.

N:Old $\xleftarrow[\text{No}]{\text{Yes}}$ New. Q:Old $\xleftarrow[\text{Yes}]{\text{No}}$ New. R:Old $\xleftarrow[\text{Yes}]{\text{Yes}}$ New. S:Old $\xleftarrow[\text{No}]{\text{No}}$ New. W:Add. Z:Discontinued. F:Interchangeable by set. K:Q'ty Change

Copyright (C) YANMAR GLOBAL CS CO., LTD. All RightsReserved.

Parts No. Index

Parts No.	Fig. No.	Ref. No.
101304-59020	13	13
101720-55750	13	31
102103-55520	13	5
		26
103854-39140	13	12
104200-55321	13	22
104200-55330	13	2
		23
104200-55341	13	24
104200-55750	13	9
		32
105010-11490	4	5
105025-59560	12	43
105311-01090	1	5
105312-59510	13	16
110250-55610	13	6
		27
118200-53010	12	2
118400-51370	10	48
119131-18320	5	5
119225-52102	13	35
119285-01580	3	14
119285-01990	1	8
119285-11990	4	12
119285-77050	14	36
119305-35170	8	3
119305-59120	12	15
119415-01330	1	30
	16	22
119415-01741	3	5
119415-11200	4	22
119415-11240	4	23
119415-11310	4	42
	16	6
119415-11320	4	43
119415-11330	4	44
	16	16
119415-11740	4	6
119415-13100	5	1
119415-13110	5	2
	16	7
119415-14581	6	3
119415-21600	7	8
119415-21700	7	1
119415-39211	8	8
119415-51030	10	5
119415-51400	10	49
119415-51500	10	64
119415-51700	10	74
119415-51710	10	75

Parts No.	Fig. No.	Ref. No.
119415-51750	10	76
119415-51760	10	77
119415-59540	12	24
119415-59810	12	20
119415-59820	12	21
119415-77820	4	52
119416-11380	4	36
119446-34801	8	1
119446-35080	8	5
119515-01200	1	29
119515-11101	4	14
119515-11110	4	15
119515-11280	4	27
119515-11800	4	9
119515-13200	5	7
	16	8
119515-14400	6	2
119515-22300	7	20
119515-22500	7	16
119515-22550	7	31
119515-23000	7	22
119515-23601	7	37
119515-23611	7	35
119515-42020	9	13
	16	20
119515-42041	9	3
119515-42350	9	18
119515-51100	10	9
119515-53001	12	1
119515-53010	12	3
119515-61200	11	5
119515-61440	11	21
119515-61550	11	92
119516-22020	7	14
119516-22030	7	29
119516-61500	11	30
119534-61420	11	71
119534-61430	11	72
119540-42000	9	1
119540-59560	12	33
119540-59570	12	31
119600-11460	4	4
	16	15
119620-01620	3	15
119620-02020	1	9
119620-14200	6	1
119620-21500	7	7
119620-21941	7	13
119620-49290	9	17
119620-59700	12	34

Parts No.	Fig. No.	Ref. No.
119621-21680	7	12
119623-01250	1	6
119624-32040	2	18
	16	13
119640-01640	3	7
119643-77900	14	38
119650-77910	14	40
119653-77950	11	136
119660-01911	2	17
119660-61300	11	78
119660-61901	11	66
119717-01501	2	1
119717-01521	2	5
119717-01570	2	2
119717-01750	2	16
119717-01800	2	6
119717-02411	1	12
119717-02930	1	26
119717-03031	4	37
119717-03070	4	38
		39
119717-11131	4	16
119717-11190	4	18
119717-11260	4	26
119717-11340	4	19
	16	4
119717-11350	4	20
	16	9
119717-11650	4	28
119717-13600	5	3
119717-21650	7	11
119717-23200	7	26
119717-23910	7	25
119717-25050	6	9
119717-25101	6	10
119717-25930	6	15
119717-32050	2	19
	16	14
119717-32060	8	4
	16	12
119717-32080	2	9
119717-32100	2	8
119717-32110	2	13
119717-32120	2	14
119717-42031	9	4
119717-42320	9	11
119717-51060	10	6
119717-51070	10	7
119717-51150	6	16
119717-51190	10	15

Parts No.	Fig. No.	Ref. No.
119717-51200	10	16
119717-51300	10	43
119717-51330	10	46
119717-51420	10	51
119717-51480	10	89
119717-51490	10	90
119717-51570	10	14
119717-55650	13	18
119717-61050	11	2
119717-61060	11	3
119717-61070	11	4
119717-61120	11	8
119717-61130	11	9
119717-61140	11	10
119717-61150	11	11
119717-61200	11	74
119717-61400	11	14
119717-61700	11	125
119718-01600	3	2
119718-01640	3	16
119718-49800	9	24
119718-77800	4	51
119734-01590	2	3
119734-02220	3	18
119742-77300	15	10
119802-13620	5	4
119802-32130	2	15
119810-01790	3	6
119810-02941	1	31
119810-55340	13	3
119810-55650	13	8
119813-59950	12	35
119833-55620	13	1
119840-59570	12	23
119940-77270	15	12
119C10-42000	9	1 -1
119C10-42320	9	11 -1
121250-55620	13	7
121252-39450	8	7
121254-55510	13	4
121257-55720	13	28
121257-55731	13	29
121450-42450	9	26
121520-34810	8	13
121850-51960	2	20
	16	3
122710-51090	10	8
124060-01050	1	4
124060-21600	7	10
124064-55510	13	25

Parts No. Index

Parts No.	Fig. No.	Ref. No.
124066-59100	12	32
124101-49531	9	23
124160-01751	2	28
	4	35
124160-01910	1	7
124465-44950	9	20
	16	17
124550-51350	10	47
124766-59050	12	42
	13	15
129001-32320	2	11
129001-32330	2	12
129005-59830	8	9
129006-03120	4	40
129052-61390	11	13
129100-01580	3	1
	7	2
129100-35140	8	2
129100-44300	15	1
129100-44310	15	2
129100-44320	15	3
129100-44330	15	4
129100-51560	10	69
129100-51570	10	70
129100-52200	10	94
129118-77230	15	6
129118-77240	15	7
129118-77250	15	8
129129-77010	14	1
129129-77210	14	6
129129-77220	14	7
129129-77230	14	8
129129-77240	14	9
129129-77250	14	10
129129-77260	14	21
129129-77270	14	22
129129-77280	14	23
129129-77290	14	24
129129-77300	14	25
129129-77310	14	27
129129-77320	14	28
129129-77330	14	29
129129-77340	14	30
129129-77350	14	31
129129-77362	14	32
129129-77380	14	34
129129-77390	14	14
129129-77400	14	17
129129-77410	14	18
129129-77420	14	19

Parts No.	Fig. No.	Ref. No.
129129-77430	14	20
129129-77460	14	3
129150-11230	4	29
129150-11750	4	31
129150-25301	6	14
129150-59131	12	18
129155-51020	10	4
129155-51140	10	12
129155-51280	10	41
		42
	11	6
129155-51450	10	59
129155-51521	10	65
129155-51530	10	66
129155-51540	10	67
129155-51550	10	68
129155-51580	10	72
129155-51591	10	73
129155-51600	10	20
129155-52051	10	93
129155-61341	11	79
129155-61450	11	22
129155-61460	11	80
129155-61480	11	24
129156-61460	11	23
129188-77200	15	5
129209-61370	11	12
129209-61930	11	134
129209-61970	11	135
129210-59050	13	14
129210-59110	12	41
129211-77920	14	43
129255-61410	11	70
129335-55700	13	20
129400-92410	16	24
129486-07901	4	1
129486-61540	11	50
129486-61650	11	60
129508-11180	4	17
129900-32130	2	10
129901-11450	4	3
	16	5
129901-53800	12	4
129901-59560	12	30
	16	19
129916-49740	9	12
129972-77341	15	13
158552-61700	11	61
158552-61710	11	65
158552-61900	11	85

Parts No.	Fig. No.	Ref. No.
158600-51170	10	13
158600-51270	10	40
158600-51410	10	50
158600-51420	10	52
158600-51442	10	53
158600-51570	10	71
158600-51790	10	78
158601-61710	11	126
171001-42290	9	19
171081-55910	13	33
174307-51700	11	31
22190-080002	8	10
		12
	16	10
22190-100002	11	81
22190-120002	11	82
	12	22
		44
	13	17
	16	18
22190-160002	10	79
22190-220002	3	9
	16	23
22217-060000	10	80
22217-120000	6	17
22242-000120	4	32
22252-000220	7	21
22272-000030	11	67
22351-050010	10	81
22351-060012	4	21
22372-040000	11	83
22411-200250	14	39
22512-040120	7	4
22857-500100	4	45
22857-500160	4	47
23414-080000	9	14
	16	21
23414-120016	11	137
23418-060000	13	34
23857-030000	8	11
23876-005000	4	13
23876-030000	2	7
23887-100002	11	84
24101-060034	10	82
24101-063034	10	83
24311-000320	2	29
	4	48
	16	11
24311-240100	13	10
		21

Parts No.	Fig. No.	Ref. No.
24316-000150	10	84
24341-000070	11	68
24341-000400	4	46
	16	2
26014-080702	13	11
26022-050122	10	85
26022-060162	10	86
26106-050102	10	87
26106-060102	8	6
	11	69
		73
		86
26106-060122	2	21
	6	8
	9	22
26106-060142	11	87
26106-060162	2	22
26106-060202	4	49
	11	88
26106-060222	3	19
26106-060352	6	13
26106-060402	2	23
		24
26106-060452	3	10
	11	89
26106-060602	2	25
	3	11
26106-060652	2	26
26106-060752	4	50
26106-080122	3	12
	9	15
26106-080142	4	2
26106-080162	13	19
26106-080202	15	11
26106-080252	9	25
26106-080402	4	34
26106-080502	9	16
26106-080652	9	21
26106-100452	15	9
26156-120302	14	35
26206-100202	3	4
26206-100252	3	3
26306-080002	2	27
	5	6
26376-120002	14	37
26577-060122	9	9
26716-060002	10	88
26716-120002	6	18
26736-120002	11	90
26756-060002	11	91

Parts No. Index

Parts No.	Fig. No.	Ref. No.
26979-050162	4	33
27241-120000	1	13
27241-250000	9	10
719415-01560	1	1
719415-51380	10	1
719415-92700	16	1
719717-02901	1	14
719717-02911	1	34
719734-01500	2	4
977770-1207F	2	30
	3	13
	4	53
	16	25
X0280210230	14	11
X0283060061	14	2
X0283270140	14	12
X9490561370	14	4
X9491200240	14	5
X9491703371	14	13
X9491730461	14	26

Parts No.	Fig. No.	Ref. No.

Parts No.	Fig. No.	Ref. No.

Parts No.	Fig. No.	Ref. No.